www.kondator.se

Powerdot

935-PD12W
935-PD12

POWER dot

CONTENT:

x1

x1

x1

A DRILL

B INSERT

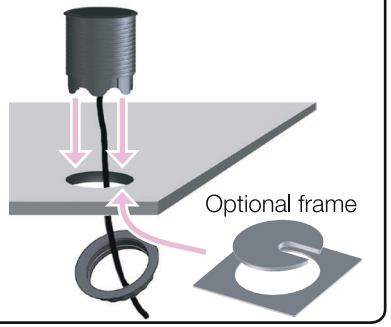

C TURN CLOCKWISE & PLUG IN

Turn the plastic fastening nut as far up the thread as possible. Make sure that it has been thoroughly tightened. Lastly, plug the Schuko plug into the wall socket.

1 CONNECT

Connect plug to Powerdot.

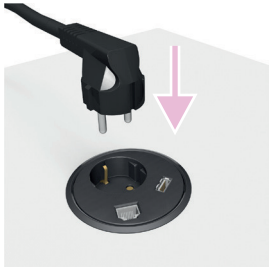

2 RELEASE

Rotate counter clockwise.

3 ADJUST

The inner part should now be loose. Adjust to desired level (see next step).

- 1 **USB Charger** (5V, 2.1A)
- 1 **Ethernet port** (RJ45)
- 1 **Schuko socket** /w 1250 mm cable

4 ADJUST LEVELS

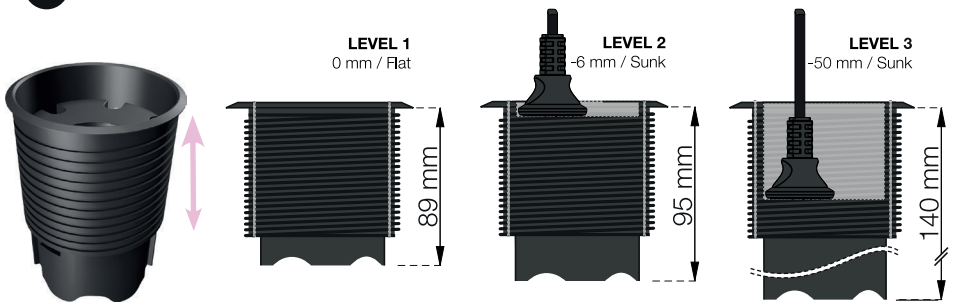

5a LOCK Level 1 & 2

Rotate clockwise

5b LOCK Level 3

Rotate

by KONDATOR

Patent pending PCT, China, EP

Revised 191108

Kondator AB, Energivägen 8 - Box 121, SE-135 23 TYRESÖ, SWEDEN