axessline

Drawing

Axessline Outlet Tray

9002500102

Top view

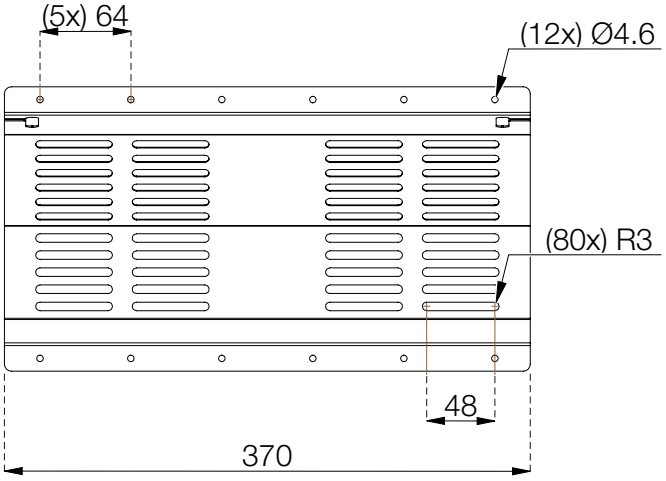

Side view

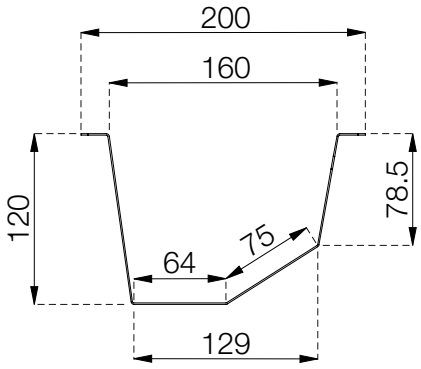
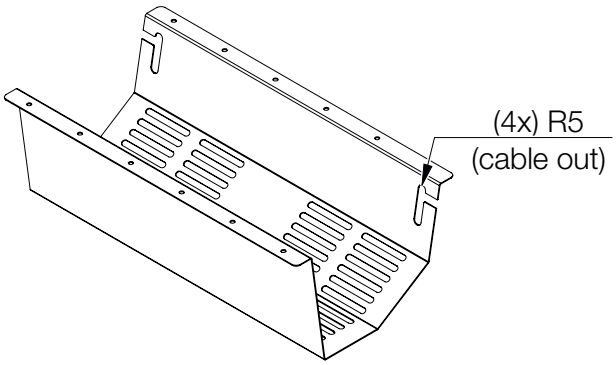
Oriented view