Technical drawing (mm)
FST081010-MN / Func ShThrow Wall Manual dimensions

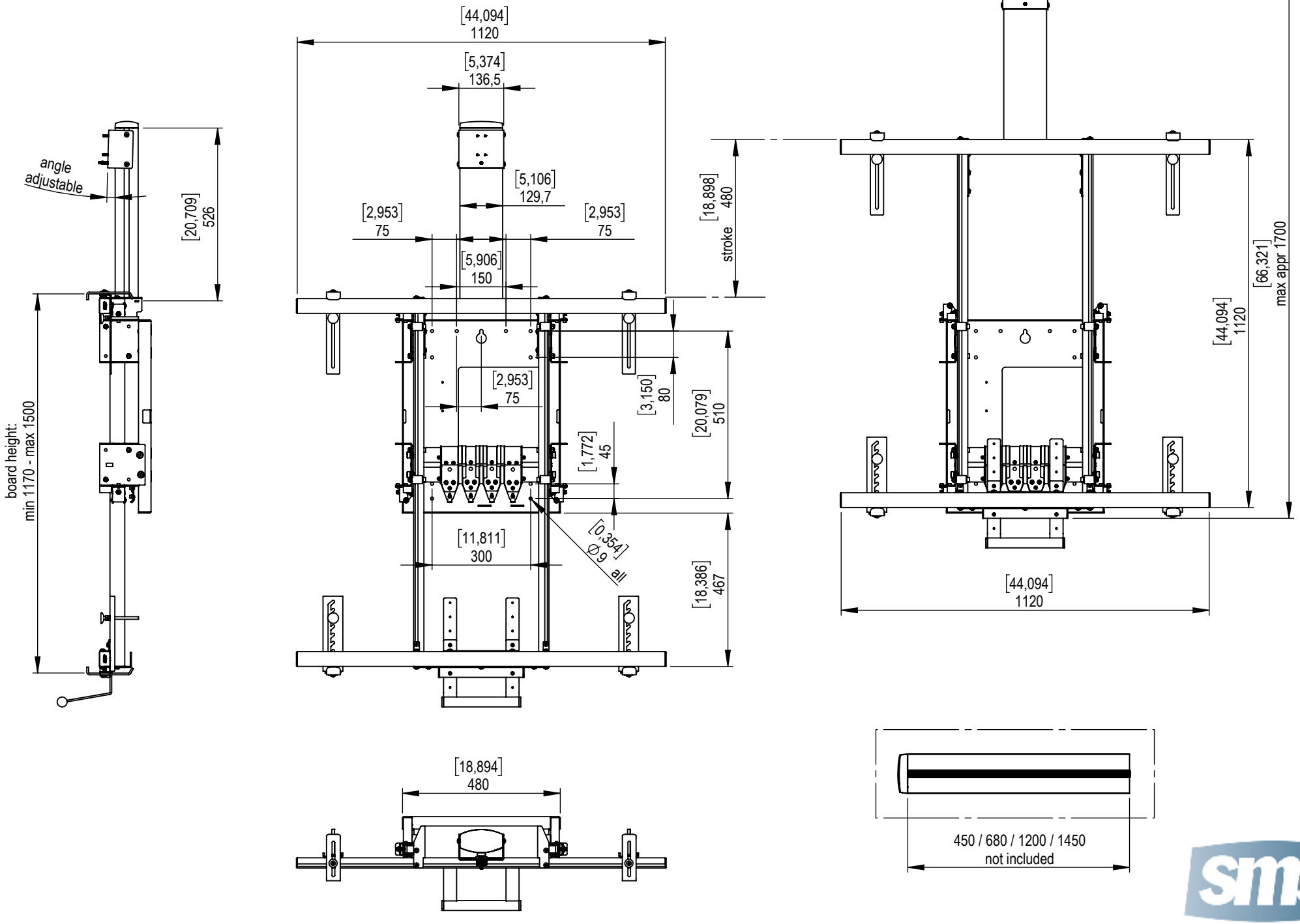

SMART MEDIA SOLUTIONS
www.smartmediasolutions.ae